BUILT-IN **DISHWASHERS**

LVI 62014

Cod. **07200078** EAN **8422248351379**

D | LED | 3

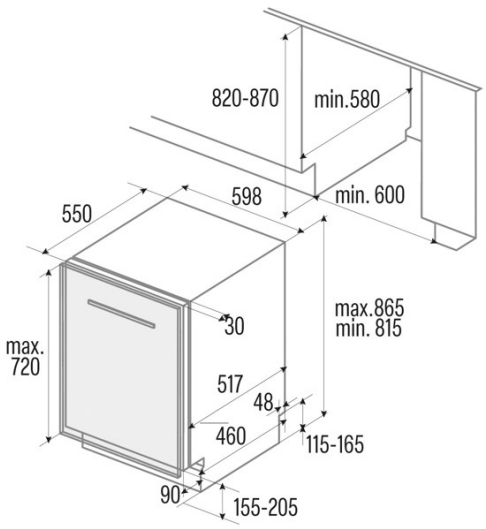

GENERAL INFORMATION

EAN/UPC	8422248351379
Subfamily	Built-in

Power connection

Nominal voltage (V)	220-240
Nominal frequency (Hz)	50
Nominal input power (W)	1760
Electric shock protection	Class II
Power cord length (m)	1500
Plug type	Type F

Product sheet according to EU Regulation 2019/2022 - 2019/2017

Default placement settings	14
Energy efficiency class	D
Noise level [dBA]	47
Installation type	Built-In

Control panel

Control type	Soft Touch Buttons
Display	LED
Salt control indicator	√
Rinse aid control indicator	√
Start delay	3-6-9h
Remaining time indicator	√
Start/Pause	√

Programmes and functions

Number of programmes	8
Programme 1 - Name	Intensive
Programme 1 - Temperature (°C)	65
Programme 2 - Name	Normal
Programme 2 - Temperature (°C)	55
Programme 3 - Name	Eco
Programme 3 - Temperature (°C)	50
Programme 4 - Name	Express 90'
Programme 4 - Temperature (°C)	55
Programme 5 - Name	Quick 30'
Programme 5 - Temperature (°C)	40
Programme 6 - Name	Automatic
Programme 6 - Temperature (°C)	60

Power and water connection

Nominal voltage (V)	220-240
Nominal frequency (Hz)	50
Nominal input power (W)	1760
Electric shock protection	Class II
Power cord length (m)	1500
Plug type	Type F
Inlet water hose length (m)	1500
Drainage water hose length (m)	1400

Installation

Width (mm)	598
Min. height (mm)	815
Depth (mm)	550
Adjustable height	√
Built-in width (mm)	600
Inner height (mm)	820
Built-in depth (mm)	580
Maximum door height (mm)	720
Sliding door	-