GRIFOS **PROFESIONALES**

CPB

Cod. **02506400** EAN **8422248107914**

INFORMACIÓN GENERAL

EAN/UPC	8422248107914
Subfamily	Professional

Features

Water Tap Type	Single-lever
Material	Brass
Material of Handle	Zinc
Material of Sprou Braided Hose	Stainless Steel 304
Finish Style	Chrome
Spout shape	Semiprofessional
Removable spout	√
Rotatory spout	360º
Airy spout	√
Shower function	√
Control type	Handle
Control position	Right Side

Installation
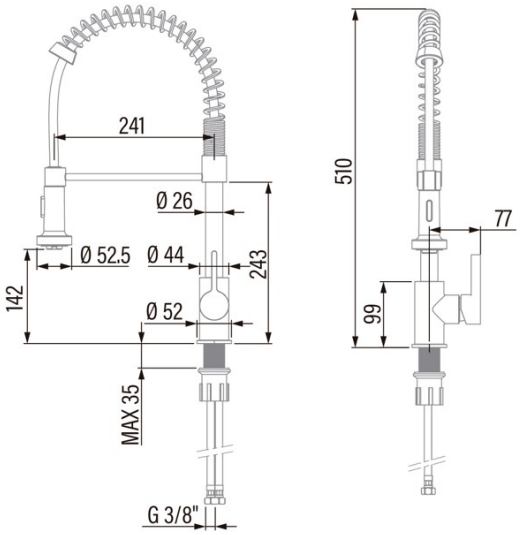
Diameter of spout braided hose ["]	3/8